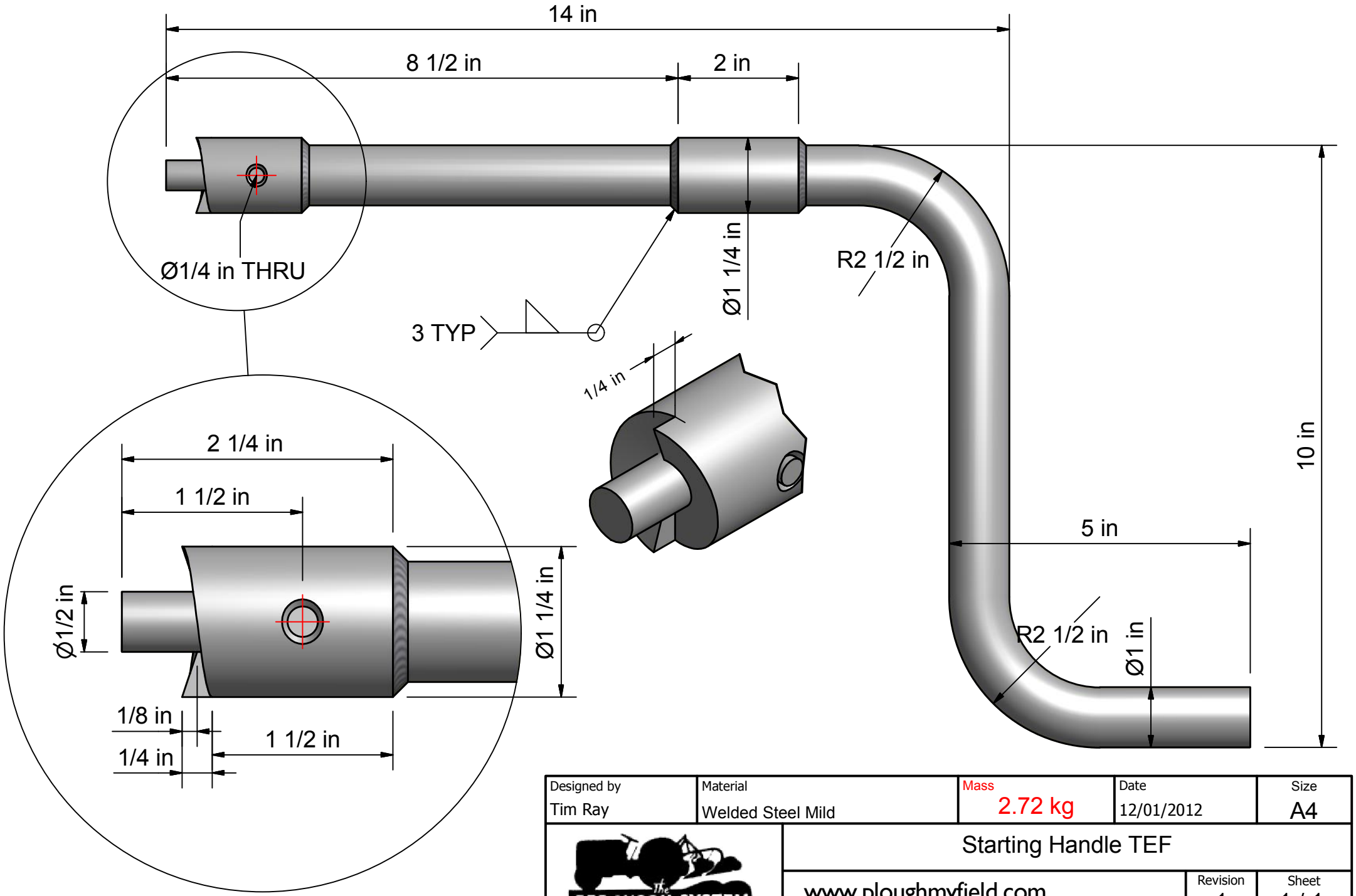

Designed by	Material	Mass	Date	Size
Tim Ray	Welded Steel Mild	2.72 kg	12/01/2012	A4

the FERGUSON SYSTEM

Starting Handle TEF

www.ploughmyfield.com

Revision	Sheet
1	1 / 1